SR-15-16, CLASSIC PRO, 1 x 4.75 GALLON (18L), R134a, GREY

RefCC0HLR
(SR1516G)

Cold beverage dispenser - Classic Pro Bubbler 1x4.75 gallon (18 L), with new easy-off release bowl and high efficiency cooling system

General Features

CLASSIC PRO BUBBLER SR-15-16 is a cold drink premix dispenser, compact size, with 1x4.75 gallon (18 L) capacity tank. The machine cools and dispenses ready-made drinks such as fresh juices, teas, cold brew coffee, cocktails, flavored water etc. The unique evaporator and the high efficiency system cool faster and more efficiently for a quick start-up. The superior engineering ensures a perfect temperature from the first to the last drop of dispensed product.

Two-piece dripless pouring valves are easy to use and clean.

Suitable for cups up to 9 inch height (22,9 cm).

New easy-off release bowl system, that makes dismantling easier and reduces cleaning time.

Drinks mix with a magnetic submerged impeller.

Agitators are provided with each unit.

Panels are in stainless steel.

OPTIONALS AVAILABLE:

• VALVE CAP: improves sealing of valve when using pulpy product

• FOUNTAIN SPRAY KIT: ideal to create a spectacular effect

• EXCLUSIVE AUTOFILL LID: retrofittable postmix Autofill Lid System increases consistency and exclude SR1522290NEMA manual filling operations.

SR1516G

CRATHCO

SR-15-16, CLASSIC PRO, 1 x 4.75 GALLON (18L), R134a, GREY

Specifications

- Suitable for cups up to 8 inch height (20 cm)
- Easy-off bowl release system for faster and easier assembly and disassembly.
- User friendly design enables machine to dispense product till the very last drop.
- Agitation function, with low foam impeller cover special for fresh juices, coffees, vitamin waters or tea.

Construction

- Refrigerant type: R134a.
- Pre-mix dispenser with stainless steel base and clear plastic bowls.
- The air intakes from the bottom and exhaust to back.
- Magnetic Submerged impeller
- Pre-mix dispenser with one (1), 4.75 gallon/18 L bowl with a 9” (22.9 cm) cup clearance

SR-15-16, CLASSIC PRO, 1 x 4.75 GALLON (18L), R134a, GREY

Electric

Supply voltage:	120 V / 1N ph / 60 Hz
Electrical power max.:	0.4 kW
Current consumption:	3 Amps
Plug type:	NEMA 5-15

Key Information:

Number of bowls:	1
Bowl's Capacity	18 gal
Control board:	Mechanical
Dimensions, Width:	8 15/16"
Dimensions, Depth:	17 3/8"
Dimensions, Height:	26 3/8"
Net weight:	43 lb

Refrigeration Data

Refrigerant gas:	R134a

Certifications

The company reserves the right to make modifications to the products without prior notice. All information correct at time of printing.

Front

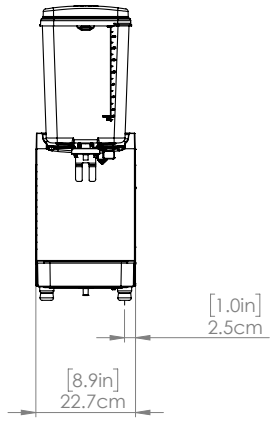

Side

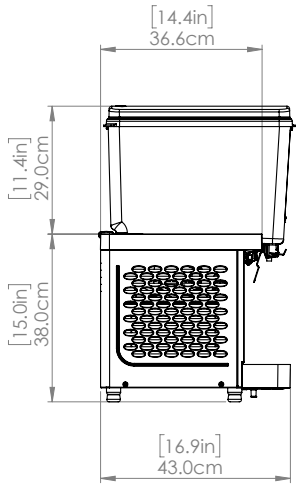

Distances

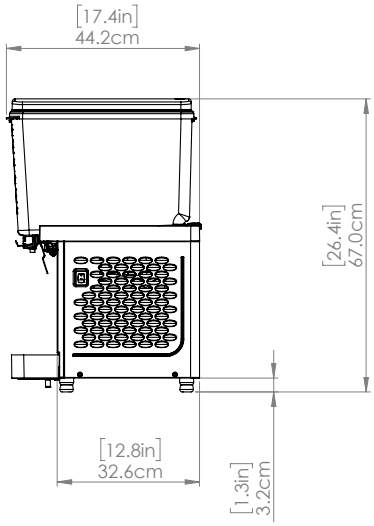

2026.03.31

CRATHCO
www.crathco.drink-systems.com
infocrathco@electroluxprofessional.com